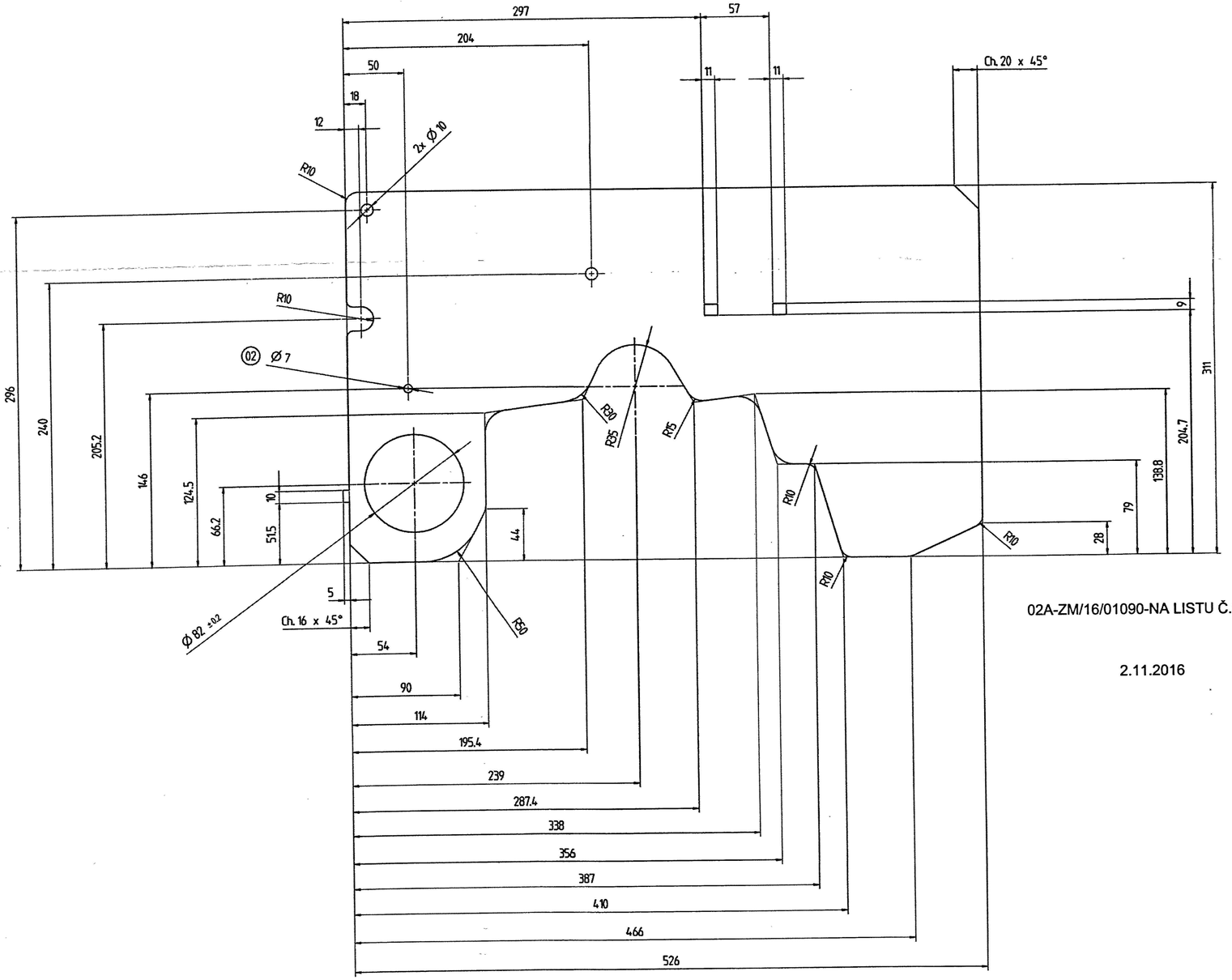

02A-ZM/16/01090-NA LISTU Č.2 ZOBRAZEN SKUTEČNÝ TVAR DÍLCE

2.11.2016 HRUBÝ

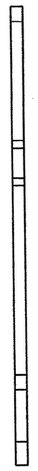

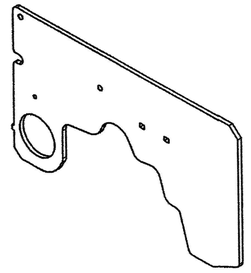

PŘEKLAD

dne: 17. 12. 2014

PROVEDL/A

VISNA

TLOUŠTKA MAT. NEMĚT. RADIUS RADIUS OHYBU DÉLKA ROZVINU

14 -11- 2016

ARCHIV 3

NOTA :

- Metal sheet thickness : 8 mm
- Radii without dimension : R = 20
- Bend radii : R = /
- Unfolded length (for info) = /

NZ 14/01402

Condition at time of delivery	
de-scaled (degree of purity SA 2 1/2 acc. ISO 8501-1)	X
without burrs acc. WN 11310	
Permissible top-end rounding during flame cutting (also positive bead acc. WN 10572)	
oil-free / free of grease	
oiled	
oiling permissible	X

Indicate the required condition at time of delivery with an X.

LASER cutting tolerances				
NOTA : min cutting radius without dimensions R = 1 mm unless otherwise specified				
≤ 30	30< ≤ 120	120< ≤ 400	400< ≤ 1000	1000 <
± 0,5	± 0,8	± 1,0	± 1,5	± 2,0

+0.5 / -0.5

First angle projection

General tolerance (GT) in mm

Size range: ≤ 30 | > 30 ≤ 120 | > 120 ≤ 400 | > 400 ≤ 1000 | > 1000

GT coarse

L	1	2	2	3	4
◁	1	2	4	6	

Lengths (L) and angle (⊥ ∠) = ± GT

Tolerance Symbols ISO 1101

- ○ roundness = 1/2ø-Tol.
- straightness/flatness = GT
- concentricity/run out = GT
- symmetry = GT
- parallelism = GT
- position = GT

Languages: en,fr

Index	alteration	Change no	Fit	Toler.
02	Oiled --> Oiled permissible	T48720		
	Adding braking edge			
	Adding 187			

Inspection dim.

Auxiliary dim. ( )

	Date	Name
Drawn	8.1.2014	J.Fonteny
Checked	8.1.2014	F.Proust
Authid	9.1.2014	R.Pelletier
M.check.	14.1.2014	J.LeCesne

Confidential document
Refer to protection notice ISO 16016

Material: S235JR following EN10025-2

Blank no:

Title: bridge piece rear

Weight: in kg 7.3

PROD.

Scale 1:2

Drawing number: / / 11914017304

Sheet: 1 of: 2

Repl. Orig. 11914017304d001 A1

Released